D6 0.03 - 0.3%

6m³/h - 0.03 -0.3%
26 GPM - 1:3000 - 1:300
0.3 - 8 bar
4.3 - 116 PSI

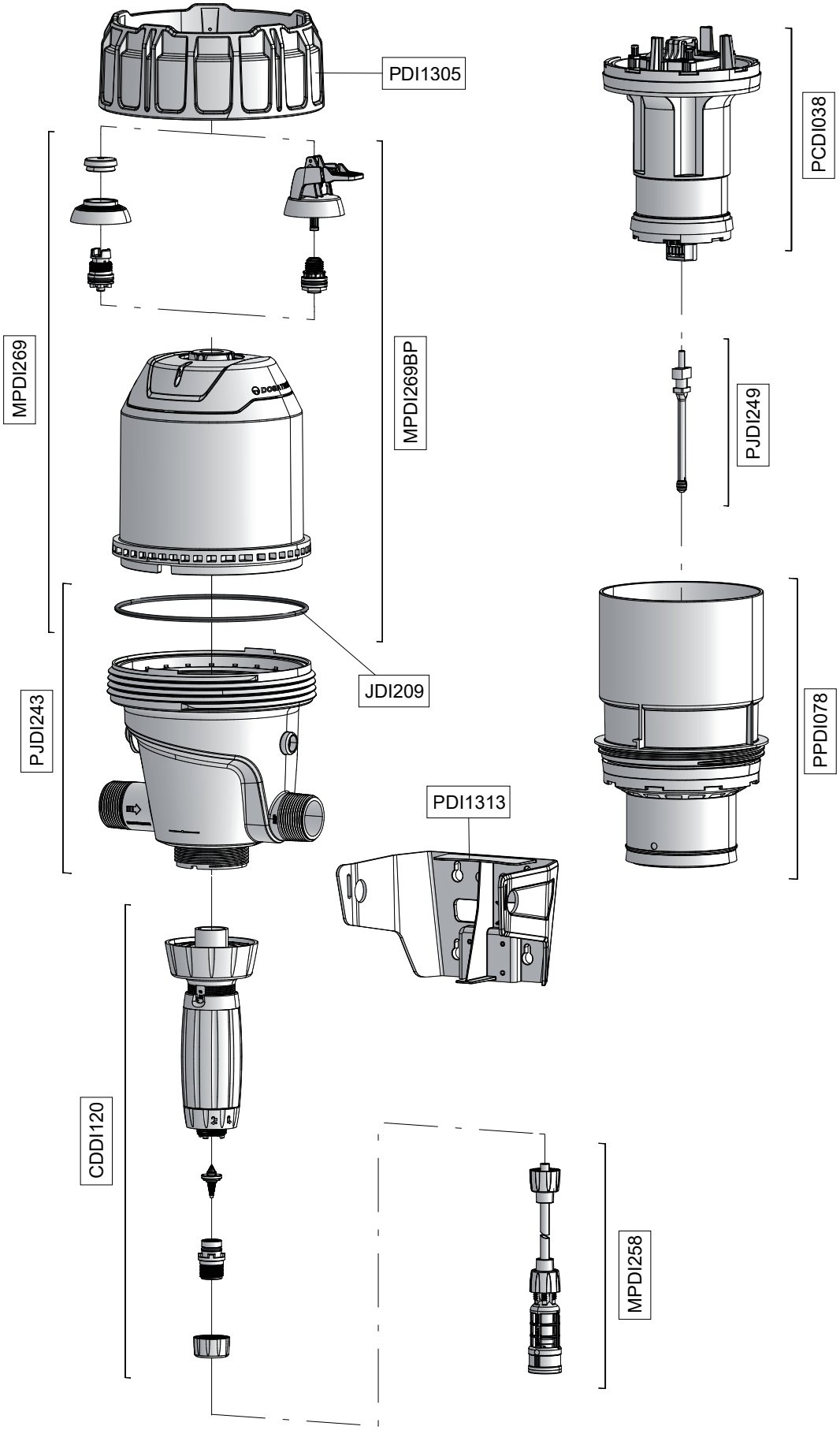

© DOSATRON INTERNATIONAL S.A.S. 2024
D6 0.03 - 0.3%/0824/U1

D6 0.03 - 0.3%

6m³/h - 0.03 -0.3%
26 GPM - 1:3000 - 1:300
0.3 - 8 bar
4.3 - 116 PSI

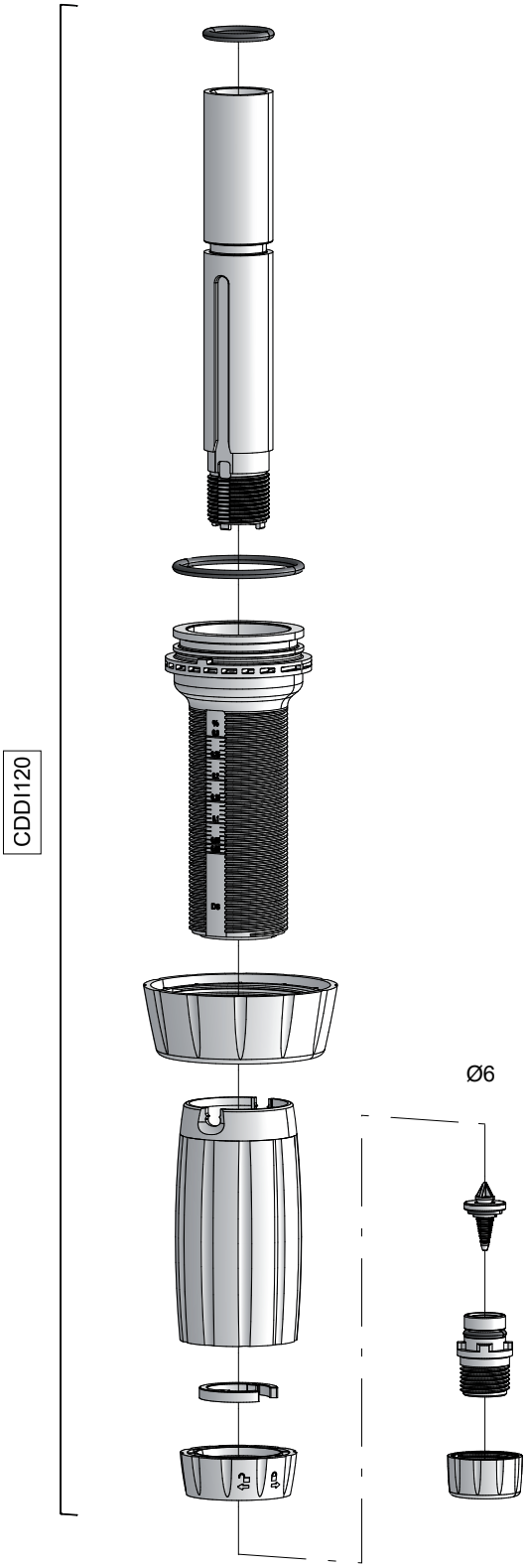

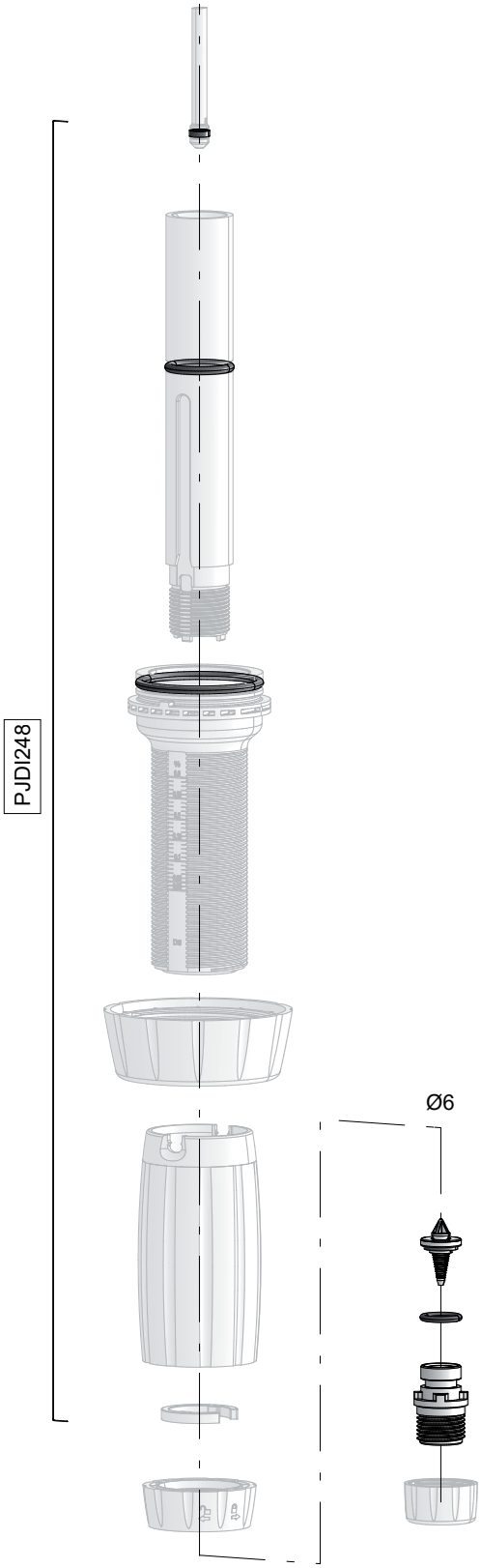

© DOSATRON INTERNATIONAL S.A.S. 2024
D6 0.03 - 0.3%/0824/U2