D20

20 m³/h - 0.2 - 2%
100 GPM - 1:500 - 1:50
0.12 - 10 bar
2 - 120 psi

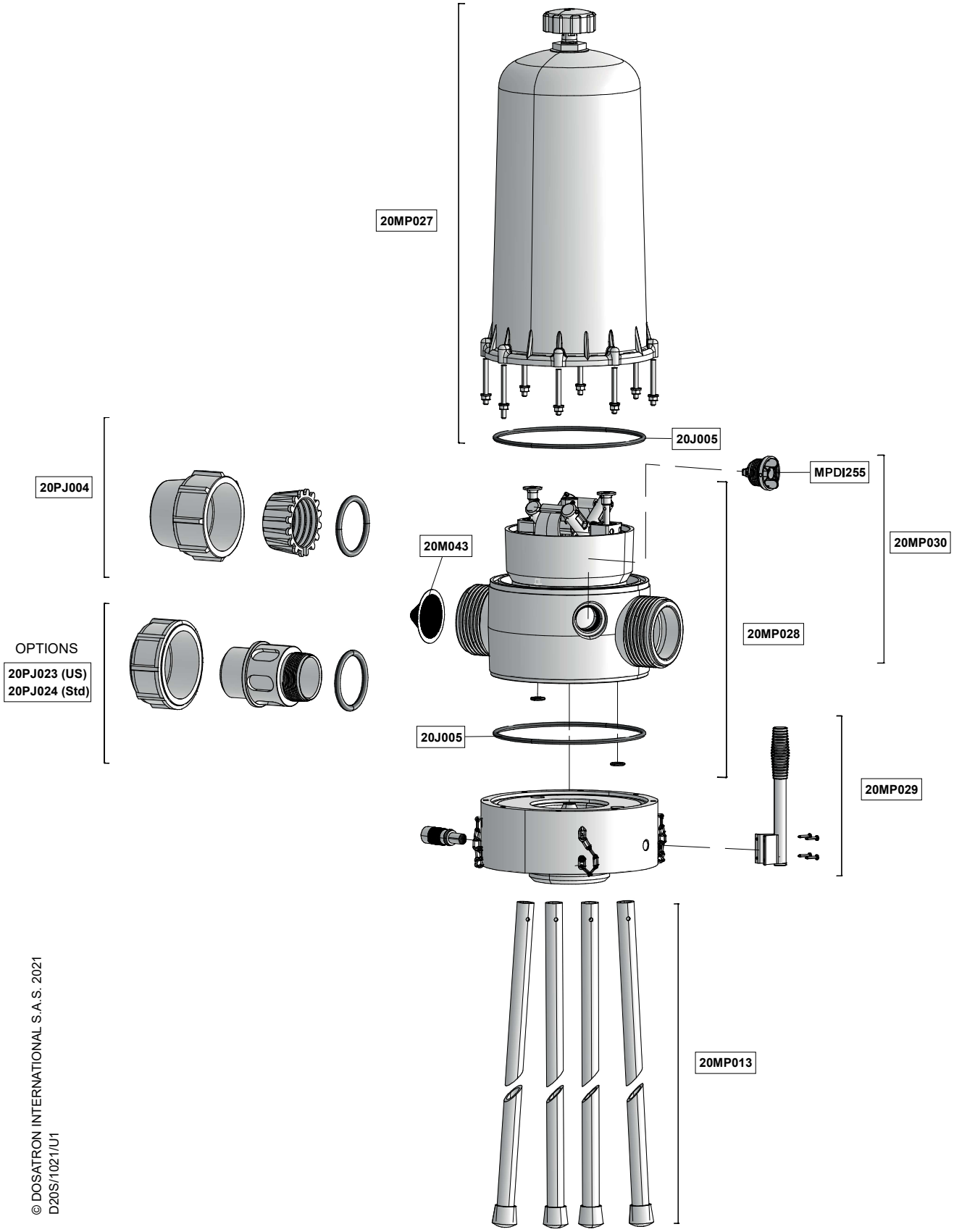

© DOSATRON INTERNATIONAL S.A.S. 2021
D20S/1021/U1

D20

20 m³/h - 0.2 - 2%
100 GPM - 1:500 - 1:50
0.12 - 10 bar
2 - 145 psi

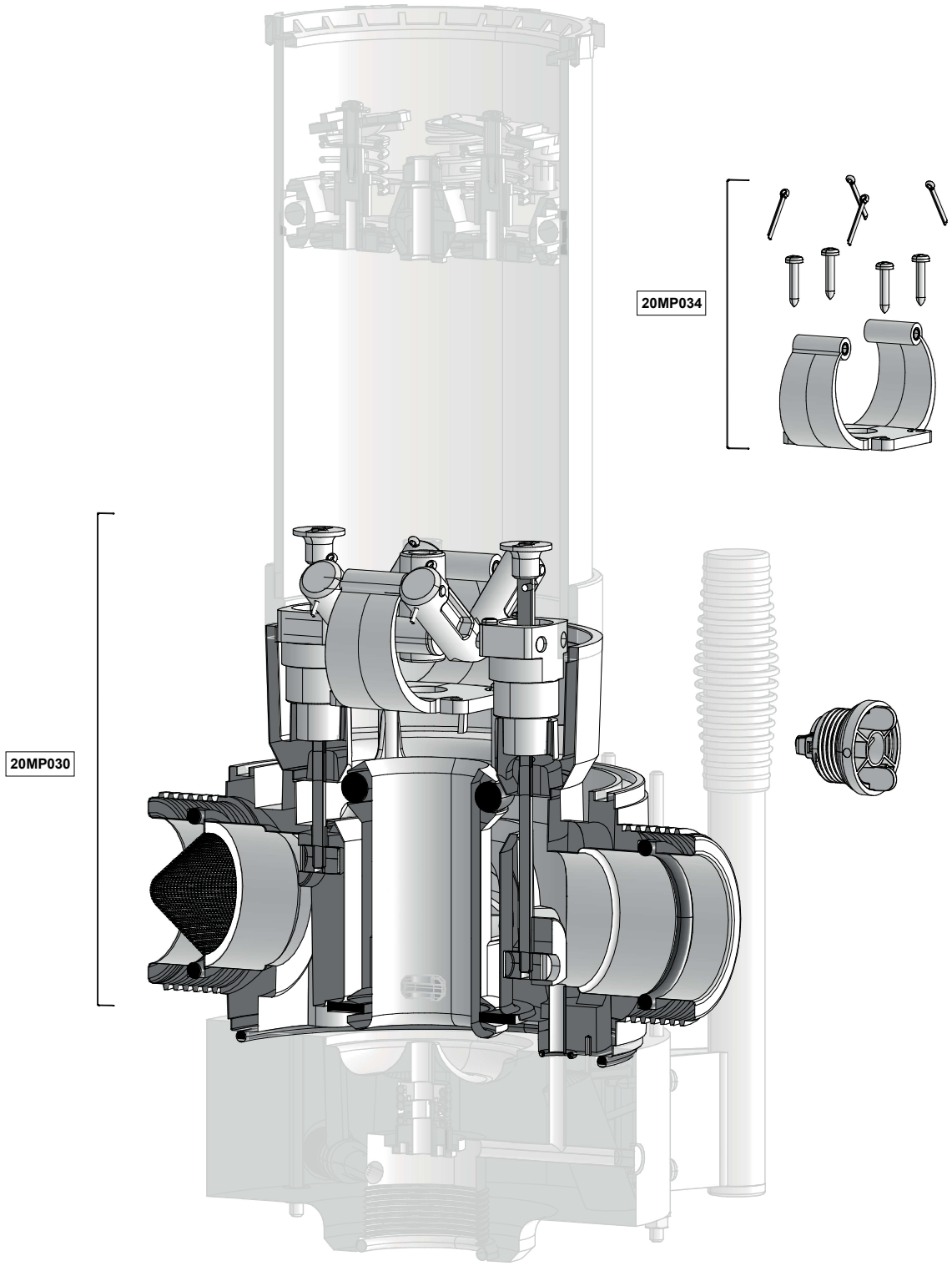

© DOSATRON INTERNATIONAL S.A.S. 2021
D20S/1021/U2

D20

20 m³/h - 0.2 - 2%
100 GPM - 1:500 - 1:50
0.12 - 10 bar
2 - 145 psi

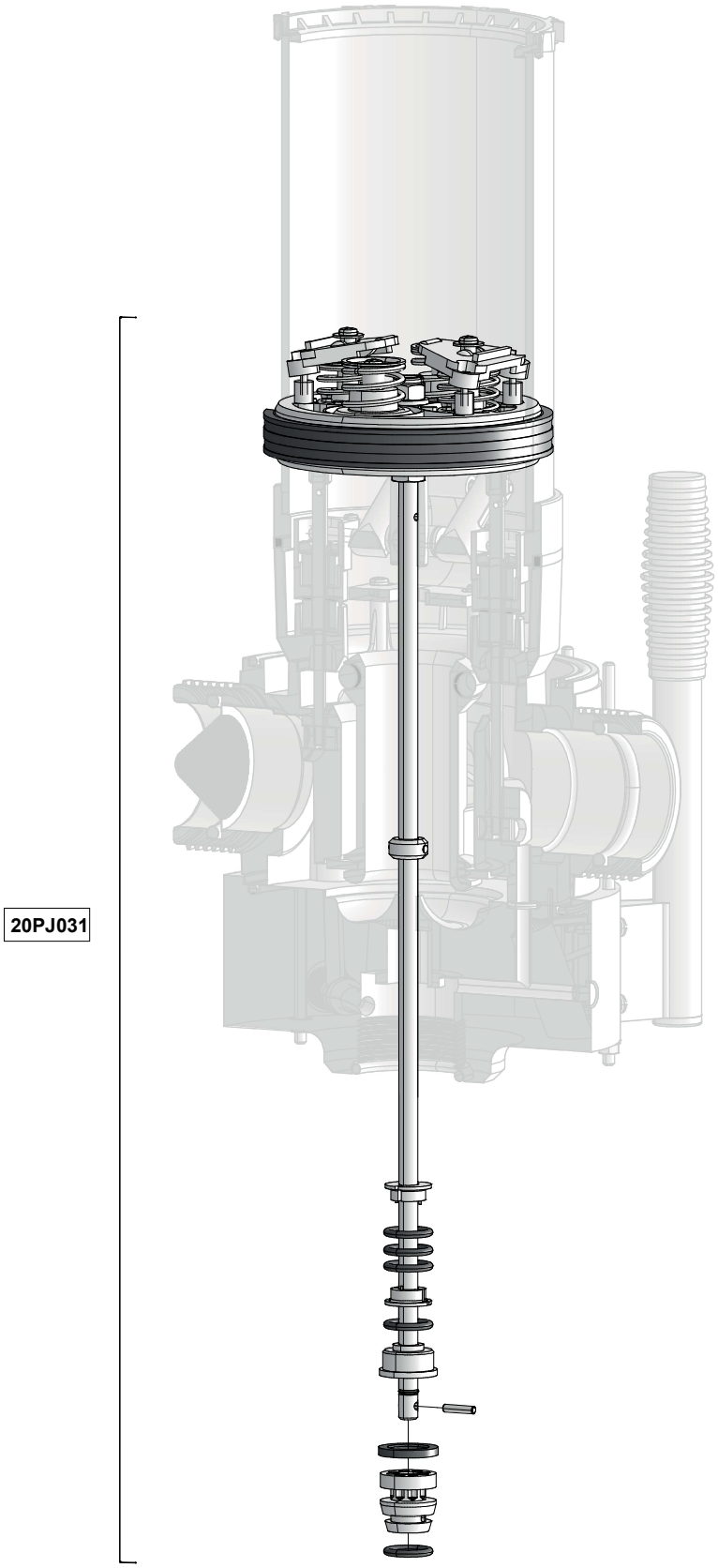

© DOSATRON INTERNATIONAL S.A.S. 2021
D20S/1021/U3

D20

20 m³/h - 0.2 - 2%
100 GPM - 1:500 - 1:50
0.12 - 10 bar
2 - 145 psi

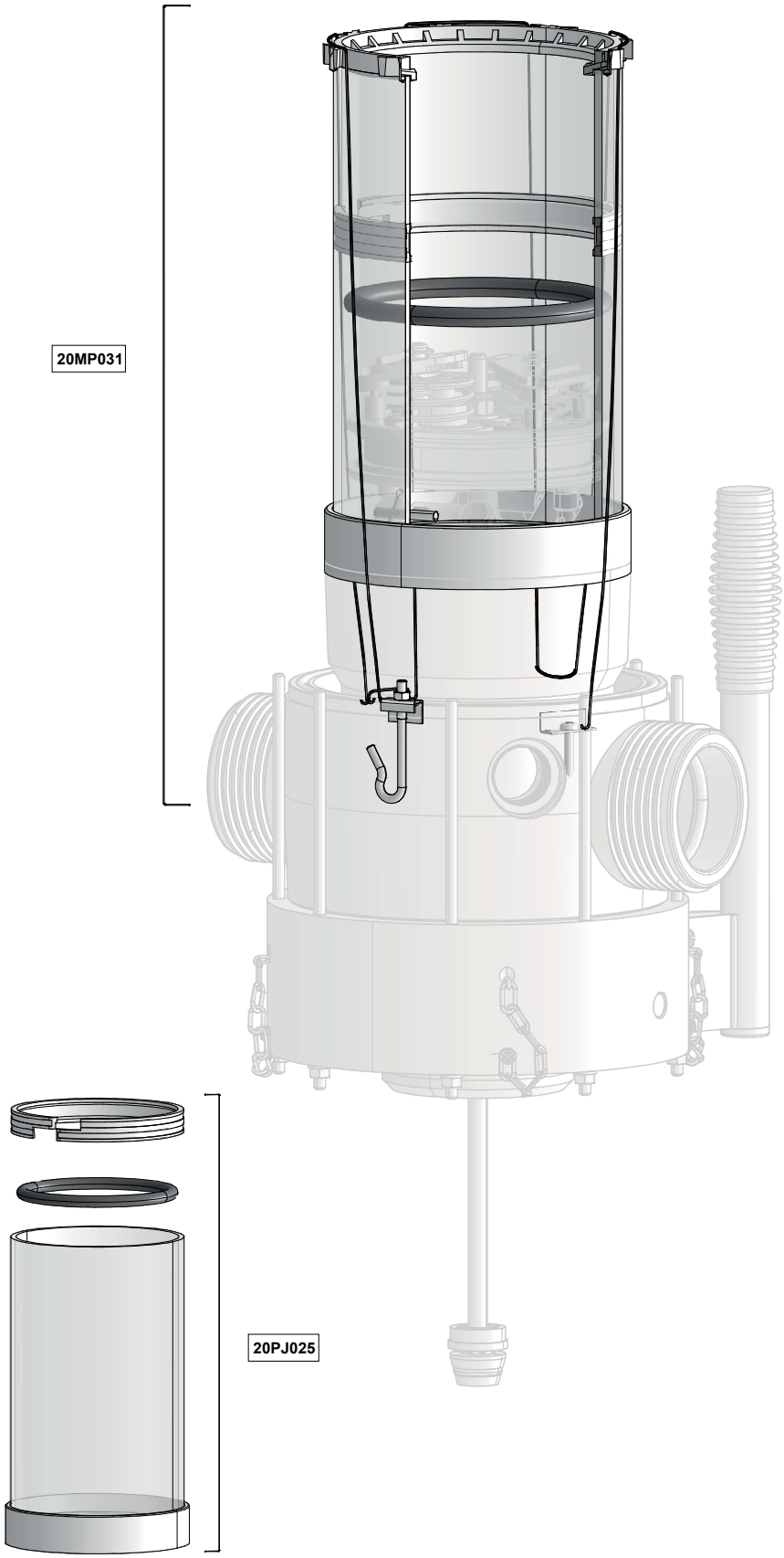

© DOSATRON INTERNATIONAL S.A.S. 2021
D20S/1021/U4

D20

20 m³/h - 0.2 - 2%
100 GPM - 1:500 - 1:50
0.12 - 10 bar
2 - 145 psi

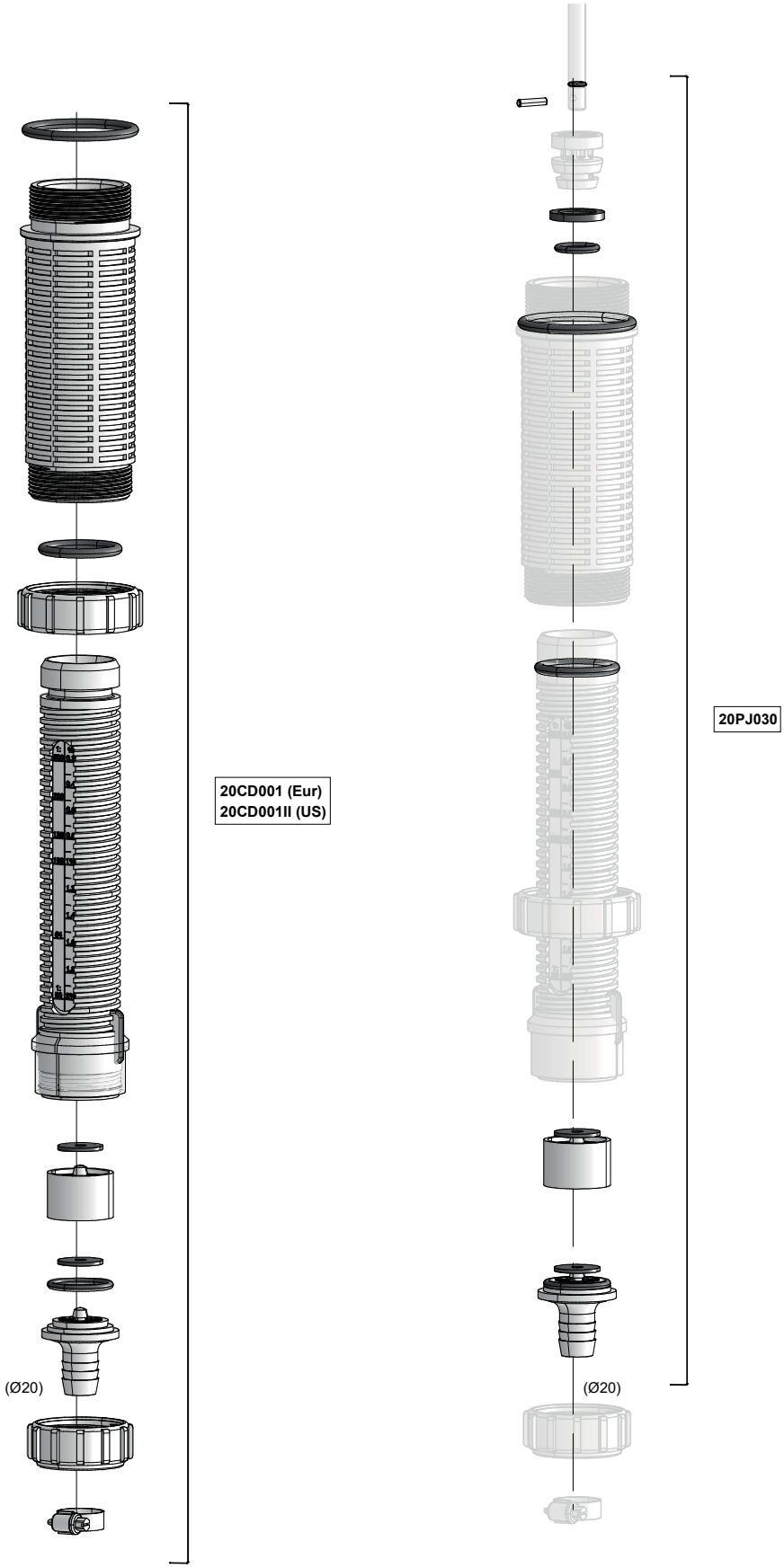

© DOSATRON INTERNATIONAL S.A.S. 2021
D20S/1021/U5

D20

20 m³/h - 0.2 - 2%
100 GPM - 1:500 - 1:50
0.12 - 10 bar
2 - 145 psi

(Ø20)

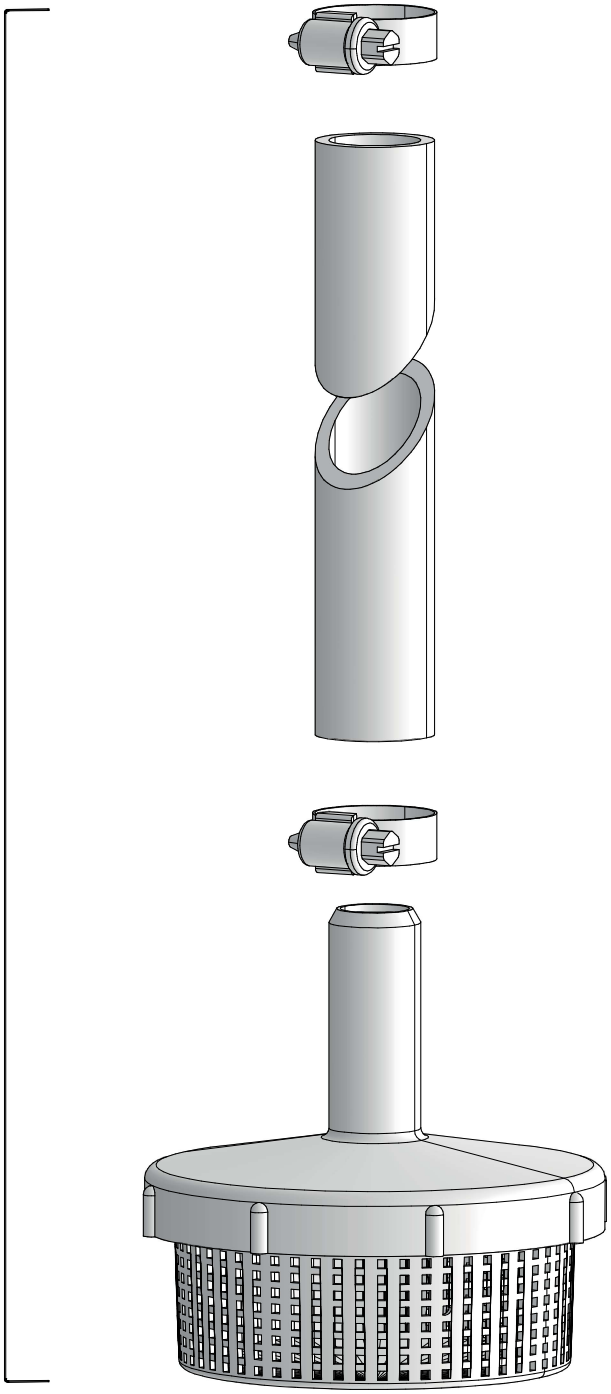

20PP001

© DOSATRON INTERNATIONAL S.A.S. 2021
D20S/1021/U6